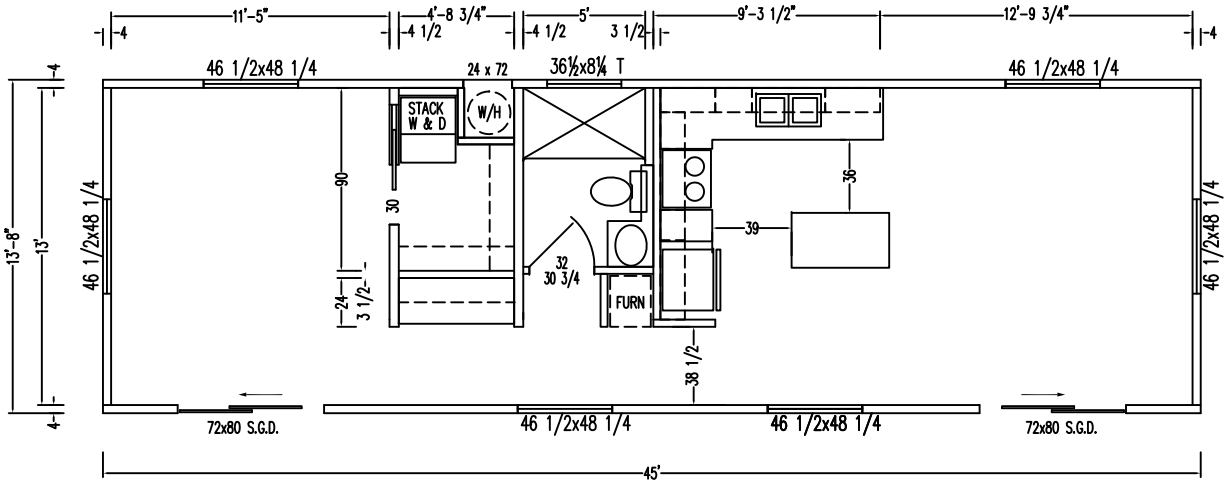

NOTES: PARENTHESIS INDICATE 2 X 6 APPLICATION

ITEM	LOCATION	2X4	2X6
FURN W/O DOOR	REAR	16'-5"	16'-5"
	ROADSIDE	6'-10 1/4"	6'-8 1/4"
FURN W/ DOOR	REAR	16'-5"	16'-5"
	ROADSIDE	6'-11 3/4"	6'-9 3/4"

ENDWALLS	2X4	2X6			RANGEHOOD COVER	W-44-L			
FRONT	T-B031121-C	T-B031121-D			FRONT BAY	C-149-K			
REAR	T-B053011-A	T-B053011-B							

DIVISIONS

111		341		552	
112		344		553	
115		345		571	
125	X	355		591	
131		528		812	
143		531			
163		535			
171		536			
181		538			

REVISIONS

BOX LENGTH	DESCRIPTION
45'-0"	4514-1CK-CATH

SKYLINE

DRAWN BY: JJ	WIND ZONE: 15#
DATE: 7-26-10	ROOF ZONE: S,M,N
SHEET _____ OF _____	
DRAWING NUMBER	
2890-CT	